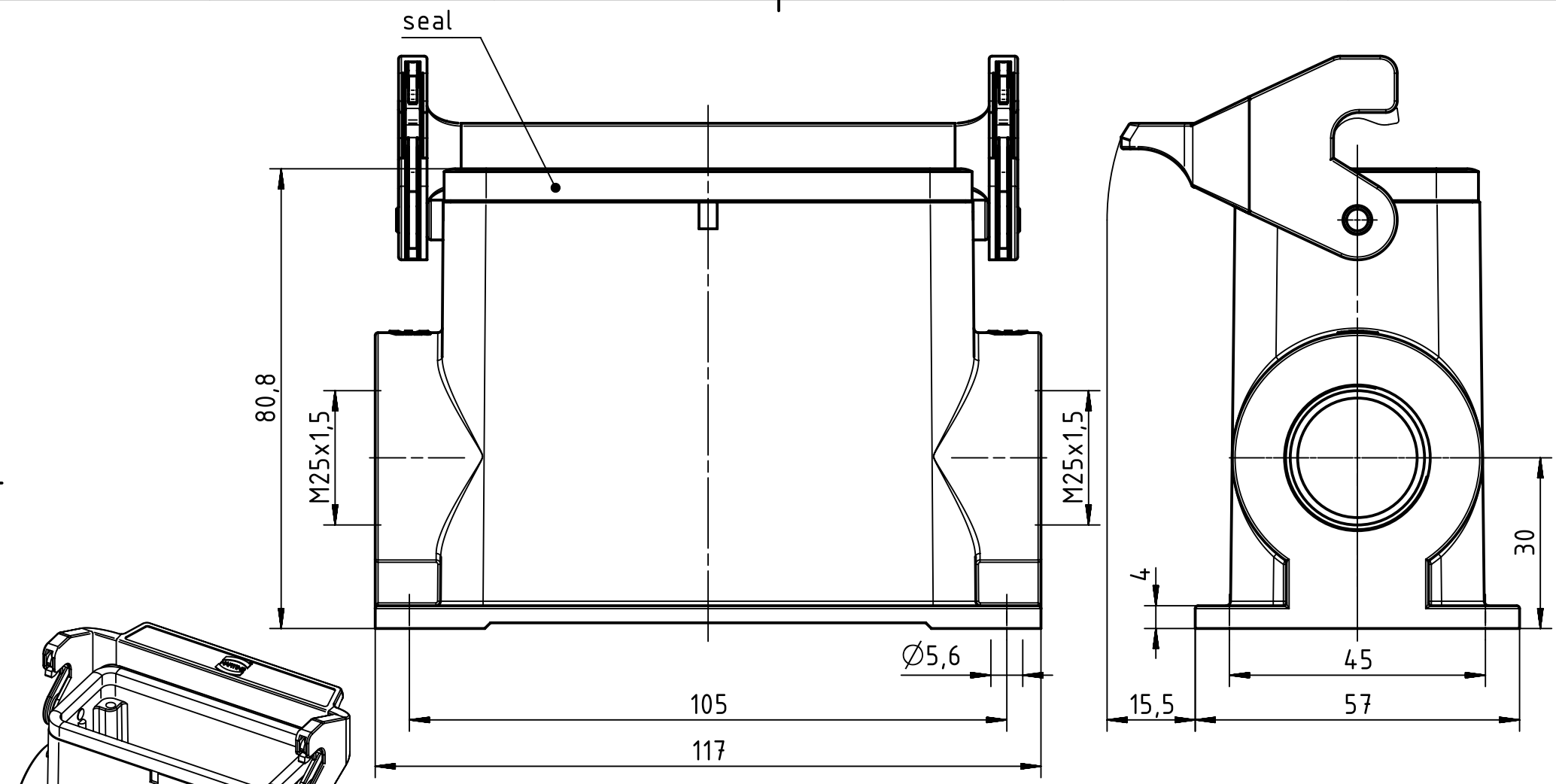

All Dimensions in mm Original Size DIN A4	Scale 1:1	Free size tol.		Ref. Sub.	
All rights reserved Department EL PD - DE	Created by FINKEV	Inspected by BERGHORN	Standardisation SCHMIDTM	Date 2016-06-01	State Final Release
HARTING Electric GmbH & Co. KG D-32339 Espelkamp	Title Han B Base Surface HC 1 Lever 2 x M25				Doc-Key / ECM-Nr. 100211716/UGD/004/A 500000104878
	Type TB	Number 19 30 016 0291		Rev. A	Page 1/1

A4